A methodological approach to EMI resistant analog integrated circuit design

Jean-Michel Redouté, *Senior Member, IEEE,* and Anna Richelli, *Member, IEEE*

***Abstract*— This paper describes the effect of EMI (electromagnetic interference) on analog integrated circuits, and introduces four design guidelines targeted at improving the susceptibility of analog integrated circuits to EMI. These guidelines are then applied to the practical design of operational amplifier topologies with a high degree of immunity to conductive EMI.**

I. Introduction

The exact repercussion of electromagnetic interference (EMI), which is injected conductively into arbitrary pins of an integrated circuit (IC), is very hard to predict owing to the fact that all the existing coupling paths need to be taken into account [1]. Robust integrated circuit topologies attempt to suppress the induced nonlinear distortion caused by conducted EMI, and most of all, to suppress the detrimental EMI induced DC shift, which varies the bias points in the circuit, hereby preventing the latter to operate correctly or even debiasing it completely.

Many successful circuit approaches, innovative designs and robust topologies with a high degree of immunity to EMI have been reported in the literature. The susceptibility of analog integrated circuits to conducted EMI has been modelled and verified with simulations as well as experimentally in several works, such as in [2] - [6]. Analytical models predicting high-power EMI effects in CMOS operational amplifiers and offering a good matching with experimental results have been presented [7]. In experimental setups, on-chip sensors have been proposed recently to measure and characterize the susceptibility of integrated circuits based on a random subsampling of voltage fluctuations across sensitive nodes [8]. Keeping pace with the continuous miniaturization of electronic circuits and systems, EMI susceptibility measurements on integrated circuits up to 40 GHz are being investigated [9].

This paper presents and derives a fundamental EMI robust analog design methodology comprising four guidelines, allowing an improved insight into potential sources leading to an increased EMI susceptibility from a design point of view. Automated optimization algorithms, such as presented in [10] where an increased EMI immunity is obtained through genetic evolution, help to make the circuit more robust but do not necessarily provide the designer more insight into the fundamental EMI problems. This paper will focus on using these four guidelines to improve the EMI robustness of integrated circuits, and applies this developed framework to existing operational amplifier designs presenting a high immunity to conducted interference.

Jean-Michel Redouté is with the Dept. of Electrical and Computer Systems Engineering, Monash University, Australia (jean-michel.redoute@monash.edu). Anna Richelli is with the Dept. of Information Engineering, University of Brescia, Italy (anna.richelli@ing.unibs.it).

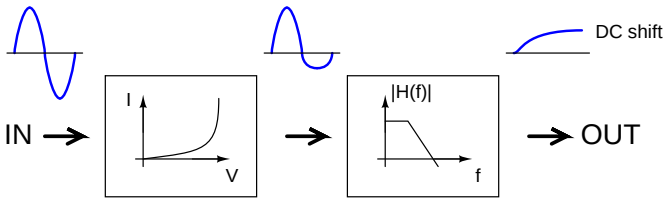

Fig. 1. Schematized overview of EMI induced DC shift appearing in an IC when EMI is conductively injected in an IC pin.

This paper is structured as follows. Section II describes the essence of the EMI problem taking place in analog integrated circuits, and illustrates this using a simple circuit example. Section III presents the measurements of EMI induced offset in a series of commercial opamps. Section IV derives four fundamental EMI robust design guidelines, and illustrates that existing EMI robust topologies can be classified according to these. Section V applies this methodology to the design of differential pairs, as these constitute the input stage of any operational amplifier design. Section VI elaborates on the former sections and uses the four robust design guidelines to classify and evaluate the immunity of reported EMI resisting opamp designs. This study highlights that a structured approach can be followed in order to mitigate the effect of conducted EMI in analog integrated circuits by design.

II. The Essence of the EMI Problem

In its simplest form, a sinusoidal conductive EMI injection taking place on an arbitrary IC pin can be represented as depicted in Fig. 1. This EMI signal infiltrates the integrated circuit at an arbitrary terminal, and propagates through the various sub-circuits. In presence of very severe EMI excursions, exceeding the supply rails, the electrostatic discharge (ESD) protective circuitry will trigger and will most likely generate a heavily nonlinear response [11] - [16]. In case of smaller EMI injections, below the circuit′s operating voltage range, the EMI signal will be nonlinearly distorted by the nonlinear device(s) that it will encounter. Since all active devices are essentially nonlinear, this EMI signal will be subjected to harmonic distortion, meaning that new frequency components will appear in its frequency spectrum. These will generate in-band spurious signals and distortion, which act detrimentally on the analog circuit. For instance, [17] describes how both the fundamental and spurious injected EMI components compromise the operation of a VCO (voltage-controlled oscillator) used in a QPSK (quadrature phase-shift

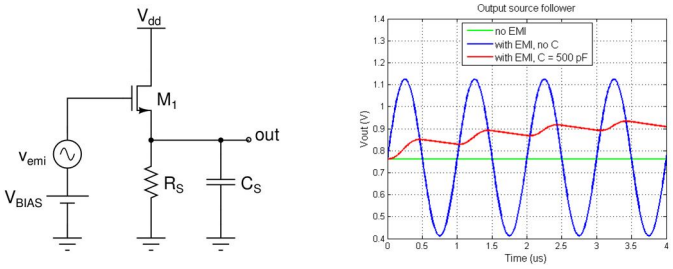

Fig. 2. (left) Source follower with a sinusoidal EMI injection at the gate - (right) the appearing output voltages.

keying) receiver.

Additionally, rectification resulting in a net EMI induced DC-shift will occur which may modify the existing bias operating points, even de-biasing the circuit completely [11] - [16]. Any nonlinear distortion will generate rectification: however, if the latter signal is low pass filtered (as shown in Fig. 1) the output will be a pure DC shifted signal. This effect is particularly harmful for two reasons. First of all, DC shift bears no relation to the original nonlinearly distorted signal, which is harmful in circuits relying on the the nonlinear voltage to current conversion inherent to active devices, as in current mirrors [11]. Secondly, the nonlinearly distorted EMI signal is accumulated across the reactive elements which limit the bandwidth: in case the EMI signal frequency exceeds the latter, the reactive elements do not discharge within one period of the EMI frequency, meaning that they will accumulate charge and hereby possibly debiasing the respective circuit node.

The previous explanation is clearly appreciated in a source follower circuit where a (parasitic) capacitor shunts the source resistance [11]: refer to Fig. 2. A sinusoidal EMI signal is injected at the input of the source follower. In case the EMI frequency is lower than the output pole frequency ("no C"), the output voltage will follow the input voltage. The EMI signal at the source of the NMOS transistor will be nonlinearly distorted because of the quadratic gate-source voltage to drain current relationship in MOS transistors. However, in case the EMI frequency exceeds the output pole frequency ("C = 500 pF"), the output capacitor will not fully charge/discharge within one EMI period: since its charging and discharging paths are asymmetrical, a net charge will be pumped across the output capacitor. As illustrated in the corresponding simulation plot, this results in a considerable DC shift at the output of the source follower, which may be sufficient to saturate the subsequent stage driven by the source follower.

III. EMI Susceptibility in Commercial Opamps

Integrated circuit pins can be typically subdivided into power supply, input and output terminals, meaning that, in a general sense, the interfering signals can penetrate the circuit from either power or I/O pins. Among all the possible interfering signals, the ones superimposed on the input pins of the operational amplifier are the most difficult to block using conventional filtering methods. This is due to the fact that external filters act on the original input signals and reduce the signal bandwidth: this evidently means that, in presence of negative feedback, stability needs to be considered as well. The maximum measured EMI induced voltage offset of some commonly used commercial amplifiers is listed in Table I: all the amplifiers were connected in a voltage follower configuration and the interfering sinusoidal signal - applied to the noninverting input pin - had an amplitude of 1 V at a frequency ranging from 100 kHz up to 1 GHz. The power supply was set to 12 V. Clearly, the measured offset voltage is significant and can debias sensitive circuit nodes which are driven by the opamp in question.

TABLE I
EMI induced offset in commercial amplifiers.

Amplifier	Technology	Voltage offset	Critical frequencies
UA741	BJT	800mV	0.1MHz-3GHz
AD705	BJT	330mV	0.3MHz-1GHz
NE5534	BJT	360mV	3MHz-0.6GHz
OPA177	BJT	360mV	0.6MHz-0.1GHz
OP176	JFET In BJT Out	200mV	3MHz-1GHz
MC33181	JFET In BJT Out	210mV	6MHz-0.6GHz
CA3140	CMOS In BJT Out	330mV	0.3MHz-1GHz
ICL7611	CMOS	550mV	0.1MHz-0.3GHz

IV. Four Fundamental EMI Robust Design Guidelines

When considering the EMI injection in Fig. 1, four fundamental ways of reducing the EMI impact can be distinguished. These four guidelines are depicted schematically in Fig. 3. The first possibility (*rule 1*) to reduce the impact of EMI injection is to attenuate the EMI signals before they reach a nonlinear device, using linear filtering. This guideline can be impractical to realize in the event that the EMI signal is in-band, or situated close to the wanted signals in the frequency spectrum. Even so, the sheer dimensions of the required passive components often make the strict application of this guideline not possible, while resistors introduce detrimental thermal noise, as will be illustrated later on. The second possibility (*rule 2*) to mitigate EMI injection is to linearize the nonlinear elements affecting the EMI signal. This can be achieved by linearizing a stage which suffers from an EMI injection, or by changing the circuit topology so that the source of the appearing nonlinearity (e.g. a gate-source voltage) is circumvented. Once nonlinear distortion of the EMI signal has taken place, only two measures are possible for mitigating the appearing DC-shift: both of them can work in parallel. The third guideline (*rule 3*) is to increase the circuit′s bandwidth so

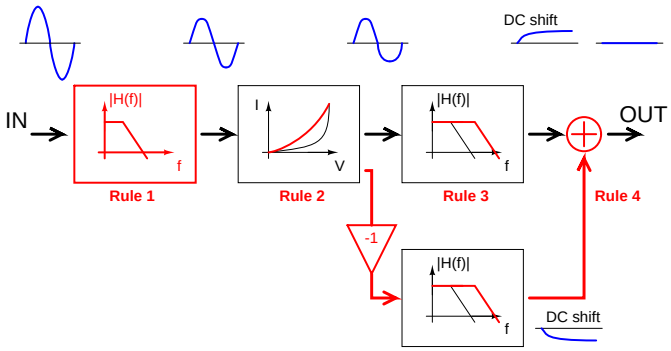

Fig. 3. Schematized overview of the four guidelines mitigating the amount of EMI injection, and correspondingly, the magnitude of the appearing EMI induced distortion and DC shift.

as to prevent the accumulation of this DC-shift across reactive elements. Extending the bandwidth results in less accumulated DC-shift and, therefore, a more linear circuit behavior. The fourth and final guideline (*rule 4*) is based on compensating the appearing EMI induced DC shift by generating its inverse or opposite value, and summing the latter to the obtained DC-shift, ideally resulting in a net effect of zero.

V. Classification of EMI Robust Differential Pairs According to the Four Design Guidelines

Differential pairs constitute the input stage in operational amplifiers: it follows that the design of an EMI robust operational amplifier structure, with a high degree of immunity to EMI injected in its input terminals, needs to start with a careful consideration and understanding of how the differential pair will react to conducted EMI, and which measures can be taken accordingly.

A classic differential pair, depicted in Fig. 4.a, generates an EMI induced offset in presence of a differential and common-mode EMI signal present on the inputs, caused by the inherent nonlinearity of the input devices as well as by the parasitic tail capacitor shunting the tail current source (C_{T1}) and shorting the latter at high EMI frequencies: this tail capacitor is mostly composed by the comparatively large bulk to source capacitors of the input pair in case the bulk wells are connected to the respective sources. This has been derived mathematically in [18] and [19], and an intuitive explanation has been offered in [20]. Essentially, at high EMI frequencies, the sources of both transistors are decoupled and the average drain currents in both branches are unequal because of the simultaneous presence of common and differential mode EMI at the differential inputs. This situation is readily linked to Fig. 1, where the nonlinearity is generated by the input differential transistors: although capacitor C_{T1} is not present in the differential-mode transfer function of a differential pair, it increases the common mode magnitude transfer function at high EMI frequencies, as described in [18] and [19]. The proposed topologies will now be analyzed according to the four derived guidelines.

First of all, following *rule 1*, the differential pair inputs can be filtered linearly, thus minimizing the amount of EMI injection, which in turn, minimizes the EMI induced offset generated by the differential pair: this is shown in Fig. 4.b,

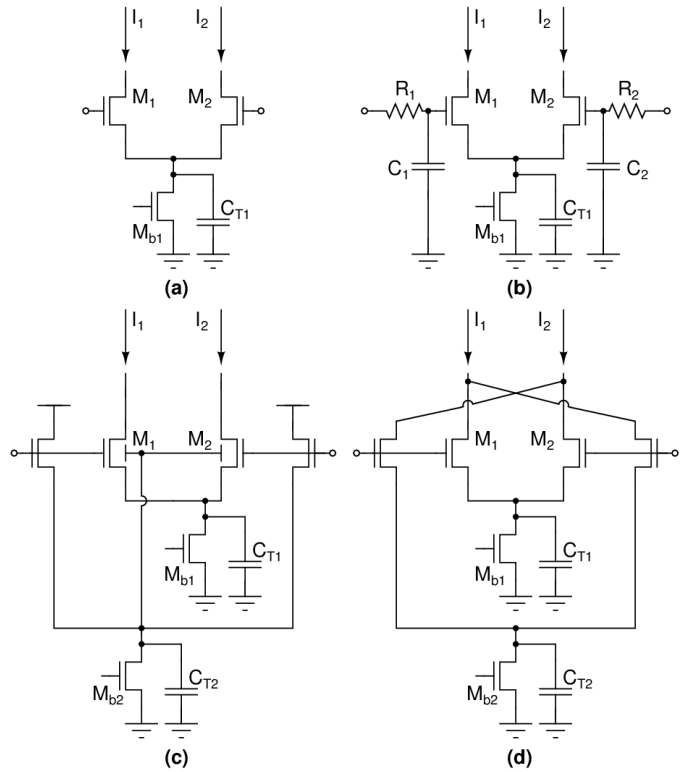

Fig. 4. (a) Classic differential pair - (b) Differential pair with low pass filtered inputs - (c) Source-buffered differential pair - (d) Cross-coupled differential pair.

and has been reported to yield good results [18]. A major disadvantage of this approach is the increase in thermal noise owing to the resistors: in practice, these resistors should be small enough so that they generate less thermal noise than the input transistors, meaning that in order to achieve the same filter pole, a large input capacitance must be used which poses a limit on the amount of filtering that can be applied. Increasing the gate source capacitance achieves the same result, as has been analyzed in [18].

Assuming that a certain portion of EMI still manages to reach the input terminals, the next guideline should be considered, namely linearizing the devices (*rule 2*). Degeneration resistors will not yield an effective solution, as they will be shorted by C_{T1}, which is composed by the bulk to ground capacitance of the input differential pair transistors. However, the input transistors can be biased in their triode region although this requires additional circuitry tracking and adjusting the common mode drain voltage of M_1-M_2 [20]. Another approach is to increase the gate-source bias voltage of the latter pair so as to generate a more linear transfer characteristic. Finally, a source-buffered pair can be used to linearize the input pair by sensing the EMI signal across C_{T1} of an auxiliary differential pair, and using negative feedback to apply it to the bulk of the main input pair [18]: this is shown in Fig. 4.c.

Filtering (*rule 1*) and linearizing the transistors (*rule 2*) may not be sufficient as a portion of the EMI will still ripple through and be nonlinearly distorted, hereby yielding offset. From then on, two approaches can be followed. *Rule*

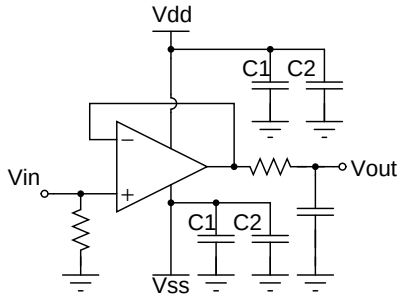

Fig. 5. CMOS opamp design with power supply filters presented in [29] and [30].

3 advises to increase the bandwidth in the nonlinear node in order to reduce charge accumulation. This can be achieved by reducing C_{T1} using a source-buffered pair[18], [19], [20]. This approach acts on two different guidelines, as it reduces the detrimental charge accumulation happening across the tail current source (*rule 3*), while linearizing the input stage through negative feedback as mentioned earlier (*rule 2*). Following *rule 4*, the EMI induced offset can be compensated by using cancellation: this is illustrated in the cross-coupled differential pair depicted in Fig. 4.d which has been described in [19]. Another example of *rule 4* is the cross-coupled complementary differential pairs reported in [21] and improved in [22].

VI. Classifying EMI Resisting Opamp Designs According to the Four Design Guidelines

This section applies the above design rules to EMI resisting opamp designs that have been discussed in the literature. Straightforward decoupling can usually prevent a detrimental DC offset to be formed when EMI is injected in the power rails, although sharp ESD pulses need to be taken into account [23], [24], [25]. Therefore, most of the opamp architectures depicted in this section have been designed to have a high immunity to the interferences arising from the input pins. In order to analyze the susceptibility of the amplifier to the interferences, these are represented by a sinusoidal waveform, superimposed on the power or the input pins, and the amplifier is connected as a voltage follower [14], [15], [26]. The amplitude of the EMI is large compared to the voltage supply, and the frequency range varies from 100 kHz up to 4 GHz in order to consider the most common sources of interferences [27]. Depending on the origin of interfering signals (input, supply lines or both), on the particular amplifier characteristics as well as on the original EMI susceptibility level, one or more of the described guidelines were applied with mixed levels of success, as described further on.

A. Rule 1: filter EMI before it is nonlinearly distorted

The literature reports several examples of this guideline: clearly, a sound layout is as important as a filtering structure [28]. In [29] and [30], a CMOS opamp design with power supply filters has been described: this filter drastically reduces the EMI susceptibility of the power supply terminals (Fig. 5).

Several capacitors were integrated on the die, filling the empty space between the circuits (the overall capacitance is close to 3 nF): substantial external capacitors (100 nF range) were also placed on the PCB. These capacitances along with the resistive lines form an R-C filter which attenuates the EMI signals before they reach the supply lines. Fig. 6 and Fig. 7 report the measurement results provided in [30].

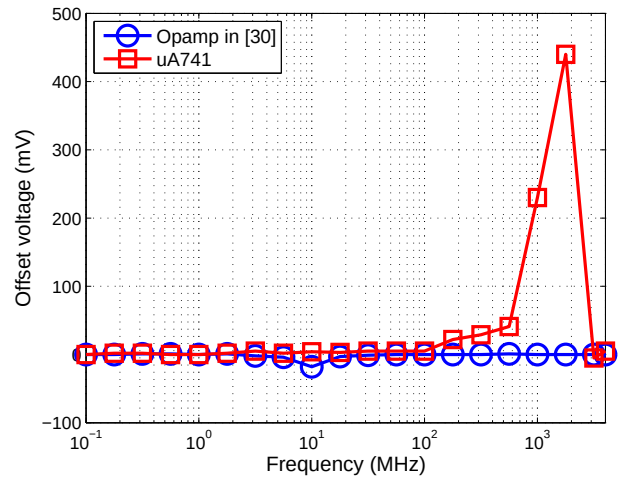

Fig. 6. Effect of 2 V_{pp} EMI applied on the V_{dd} pin: a comparison between the uA741 and the CMOS opamp presented in [30].

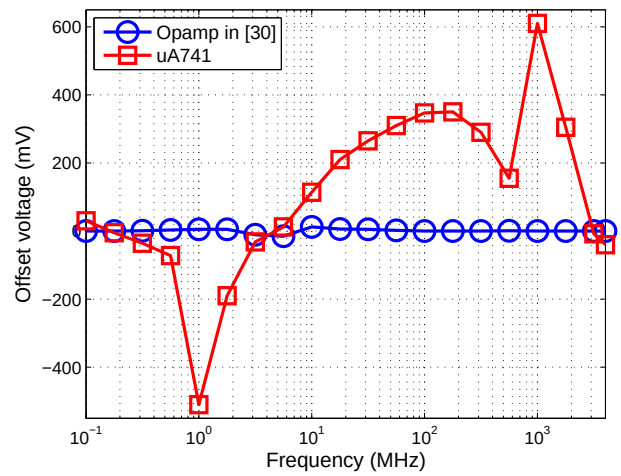

Fig. 7. Effect of 2 V_{pp} EMI applied on the V_{ss} pin: a comparison between the uA741 and the CMOS opamp presented in [30].

The amplifier in [30] has a dual rail supply of +/- 2.5 V: the interfering signal has an amplitude of 2 V_{pp} and a frequency ranging from 100 kHz up to 4 GHz. In this work, the susceptibility results are compared to those of the well-known uA741 under similar measurement conditions: the latter exhibits a remarkable EMI induced offset. Similar conclusions can equally be drawn from the measurement results provided in [29]. In order to validate the designs, a test-chip of the opamps presented in [29] and [30] has been designed in the AMS CYE 0.8 μm CMOS process.

The disadvantage of filtering EMI is that it is not straightforward to implement at a circuit input. An EMI filter at the input terminals reduces the bandwidth of the input differential pair, and can, in presence of negative feedback, dramatically

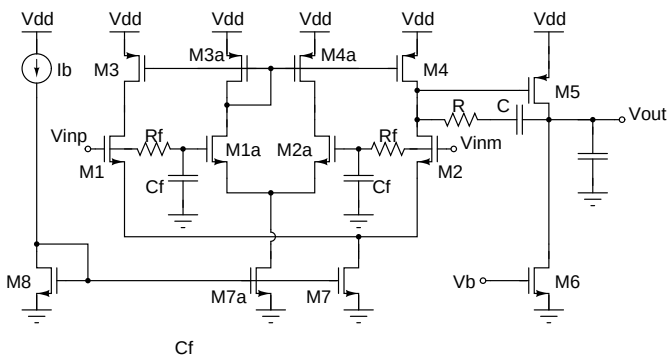

Fig. 8. Schematic of the opamp presented in [31].

deteriorate the phase margin. An improved approach is introduced in [31] and [32]. The propagation of the interfering signals arising at the input pins has been analyzed in a Miller amplifier and another way to interrupt the EMI propagation without impacting the gain bandwidth product and the ensuing stability, has been studied in [31]: this design is shown in Fig. 8, and is based on a replica circuit, composed of an auxiliary differential pair, which is less affected by the interferences owing to a low-pass R-C filter, and which is connected to an auxiliary current mirror. The effective amplifier input stage consists of transistors M_1, M_2, M_3, M_4 and M_7: M_1 and M_2 constitute the input differential pair, M_3 and M_4 form the active loads, and M_7 sinks the tail current source. Equivalent to the classical Miller compensated two stage opamp, the biasing circuit is represented by means of transistor M_8 and the ideal current source I_b, for the sake of clarity. The auxiliary input stage is based on transistors M_{1a}, M_{2a}, M_{3a}, M_{4a} and M_{7a}. Transistors M_{1a} and M_{2a} act as a replica differential pair, which is ideally immune to the interferences thanks to the low-pass R-C filter. M_{3a} and M_{4a} form the active load of the auxiliary differential pair. The R-C low-pass filter has a cut-off frequency of 800 kHz. It should be observed that the replica circuit introduces a zero-pole doublet in the frequency response and such doublet has no detrimental effect on the phase margin.

In order to validate this circuit topology, this circuit has been layouted in a 0.35 μm CMOS technology (AMSC35B4 process) with 1.8 V of supply voltage, 70 dB gain, 40 MHz gain bandwidth product (GBW) and 70° phase margin. In order to have a fair comparison, the Miller amplifier and the proposed amplifier were designed preserving the same aspect ratio (i.e. the same transistor size, the same frequency compensation and the same capacitive load). This highlights another advantage of the replica circuit approach which allows for a straightforward design. The simulations performed on the extracted view confirm the superior immunity to EMI compared to the original Miller amplifier: the EMI amplitude was first selected to be 900 mV$_{pp}$ and then 1.8 V$_{pp}$, and the frequency range spans 1 MHz up to 4 GHz. The results are reported in Fig. 9: these illustrate that the amplifier proposed in [31] exhibits an EMI susceptibility reduced by more than one order of magnitude compared to the original Miller architecture.

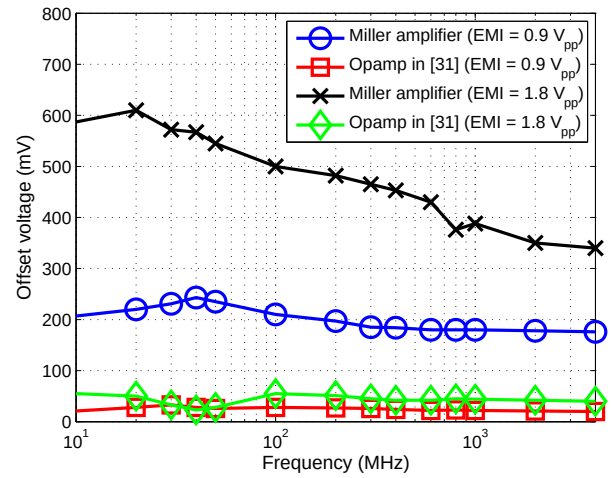

Fig. 9. 900 mV$_{pp}$ and 1.8 mV$_{pp}$ EMI injected in the input pin: a comparison between the Miller amplifier and the opamp presented in [31].

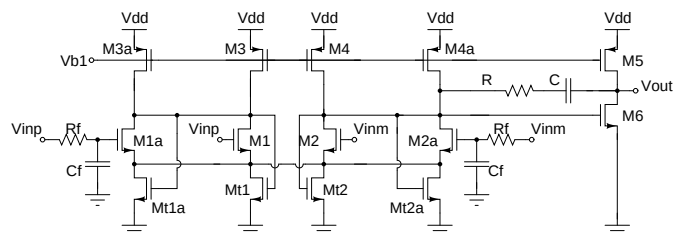

Fig. 10. Schematic of the opamp presented in [32].

The final case study is described in [32]: this work focuses on a novel input stage [33] which uses a minimal supply voltage below 1 V. Starting from the original amplifier reported in [33], a modified architecture has been proposed in [32] which meets the EMI immunity requirements. The overall schematic is shown in Fig. 10. The effective amplifier input stage consists of transistors named M_1, M_2, M_3, M_4, M_{t1} and M_{t2}: the auxiliary input stage is formed by transistors M_{1a}, M_{2a}, M_{3a}, M_{4a}, M_{t2a} and M_{t2b}, which are immune to interferences owing to the low-pass R-C filter. A summary of the main AC characteristics of the original opamp (the opamp with R-C filter and the opamp with replica circuit) shows that the latter has a better frequency response with respect to the opamp with R-C filter: both the gain bandwidth product and the phase margin are larger, indeed, than those of the opamp with R-C filter. A straightforward explanation is that the opamp with an R-C filter exhibits a small-signal amplification, given by:

$$A_d(s) = \frac{A'_d(s)}{1 + sRC}, \tag{1}$$

where $A'_d(s)$ is the differential gain of the original amplifier. The amplification of the opamp based on the replica circuit is:

$$A_d(s) = A'_d(s).\frac{2 + sRC}{2.(1 + sRC)}. \tag{2}$$

As can be seen in previous expression, the replica circuit introduces a zero-pole doublet in the frequency response and

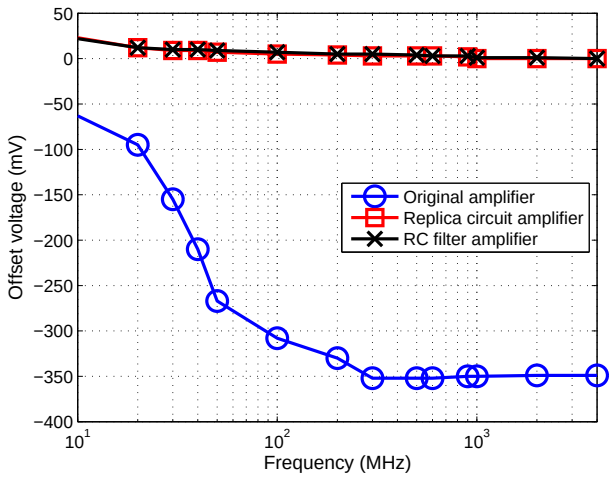

Fig. 11. 1.3 V_{pp} EMI on the input pin, in the case of V_{dd}=1.8V: a comparison between the opamps presented in [32].

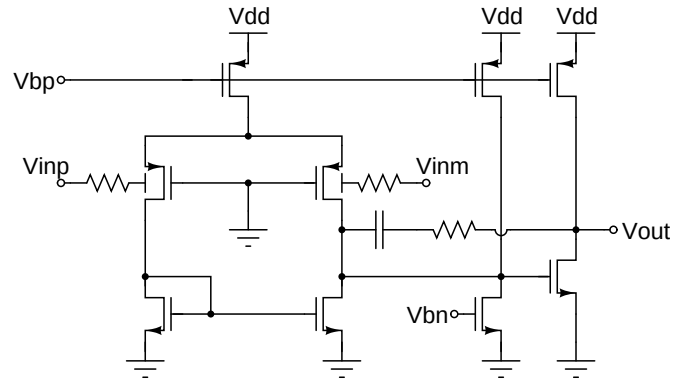

Fig. 12. Schematic of the opamp presented in [34].

such a doublet has no detrimental effect on the phase margin. The minimum voltage supply of the amplifier is 700 mV: the voltage gain is 63 dB and the GBW is 1.6 MHz, with a 75° of phase margin. Increasing the voltage supply to 1 V, the gain is 73 dB and the GBW is 4 MHz. In order to verify the EMI immunity of the amplifier and comparing that to the original topology, the simulations were performed for different supply voltage ranges and EMI conditions. Generally speaking, the EMI immunity depends on the interfering signal amplitude and frequency. The susceptibility of the opamp is commonly at its highest point between high and medium EMI frequencies (around and above 100 MHz) [32]: additionally, there is a threshold for the EMI amplitude at which the opamp exhibits a negligible susceptibility, independently on the frequency [32]. In this case, it has been found that the threshold of EMI amplitude is around 400 mV_{pp}: below this amplitude, the original opamp exhibits a negligible susceptibility. A sample of the obtained results is shown in Fig. 11.

To summarize this section, it is worth noting that the approach derived from this guideline, which is based on EMI filtering, is straightforward and practical from the designer's point of view: however, it exhibits the main disadvantage of a considerable area requirement due to the large R-C passive filter, as well as the introduction of thermal noise. Finally, in presence of a negative feedback loop, filtering may lead to stability issues.

B. Rule 2: linearize in order to avoid nonlinear EMI distortion

A design making use of this guideline is reported in [34]. This bulk-driven Miller architecture is very appealing in applications requiring a very low supply voltage, because it is compatible with a larger input common mode range compared to the standard gate-driven amplifiers. This circuit is composed of an input differential pair, a current source, an active load and a common source stage, and is depicted in Fig. 12. As stated above, the input stage exhibits a better common mode input range, and is correspondingly more linear, compared to the gate-driven topology. This is especially appealing in the field of ultra-low voltage applications. On the other hand, considering the small signal behavior, the bulk-driven architecture exhibits a smaller GBW product, due to the bulk transconductance (g_{mb}), which is smaller than the gate transconductance (g_m). However, many applications, in particular in the field of biomedical instrumentations, do not require a large gain-bandwidth product, but need a low power consumption and very low voltage supply.

An extra concern arises with the injection of EMI. The bulk-driven amplifier has been analyzed when an EMI signal is applied to the input pins. The results of this analysis showed that the susceptibility is lower than that of a gate-driven topology, but must preferably be improved. Therefore, a resistor pair was connected to the differential input, because it forms an effective R-C filter along with the input bulk capacitances (*rule 1*). The resistors (300 kΩ) were dimensioned observing the trade-off between the filtering effectiveness and the amplifier AC performance. The input RC filter, formed by the resistors and the parasitic capacitances, introduces, indeed, a pole, which can have a detrimental effect on the GBW and the phase margin. A negligible reduction of the GBW and the phase margin is caused by 300 kΩ resistors.

The amplifier has been designed in a 0.35 μm AMS CMOS process. The voltage supply is 1 V, the gain is 90 dB and the GBW is 113 kHz. Simulations were performed on the layout extracted circuit: the EMI amplitude was assumed to be 800 mV_{pp}, which is significant compared to the 1 V V_{dd}, and the EMI frequency range varied from 100 kHz up to 4 GHz. The results in the worst case conditions are shown in Fig. 13. This figure plots the offset of a classical gate-driven Miller opamp, the offset of a bulk-driven amplifier without R_1-R_2 arrangement and the offset of the amplifier proposed in [34]. The amplifier in [34] shows an EMI susceptibility reduced by more than one order of magnitude. The measurements illustrate that the maximum offset caused by EMI is negligible, while the offset of the gate-driven Miller amplifier is more than 100 mV for identical operating conditions. To summarize, the bulk-driven amplifier proposed in [34] exhibits a superior immunity to EMI injected in its input pins compared to the standard bulk-driven topology.

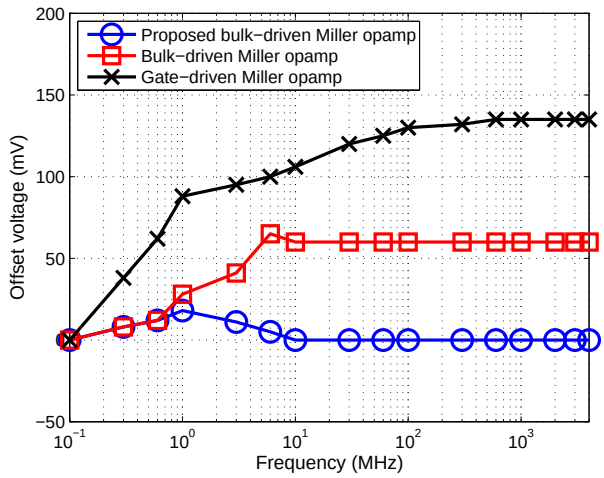

Fig. 13. 800 mV$_{pp}$ EMI: a comparison between the opamps presented in [34].

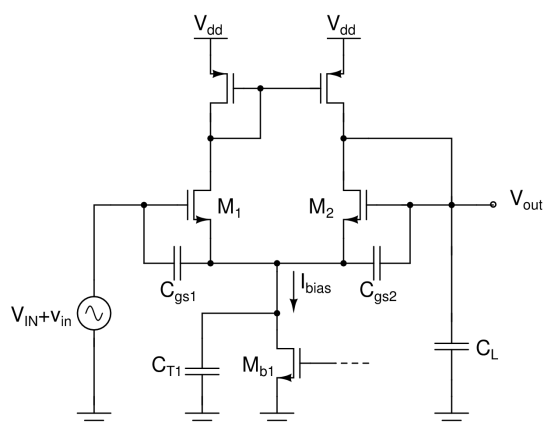

Fig. 14. OTA connected in a voltage follower configuration.

C. Rule 3: minimize charge accumulation after the nonlinear EMI distortion has taken place

Guideline 3 is not often encountered by itself in opamp design, as minimizing charge accumulation essentially means that the parasitic capacitance on the non-linear nodes need to be decreased, which is usually done anyway in order to improve the phase margin. Additionally, reducing parasitic capacitors impacts the linearity of devices (*rule 2*). A good example of this fact can be obtained when studying the effect of asymmetrical slew rate. Consider the basic one stage operational transconductance amplifier (OTA) connected in a voltage follower configuration as depicted in Fig. 14. Ideally, the positive and negative slew rates of this OTA are equal to each other, and defined by the bias current (I_{bias}) and the load capacitor (C_L):

$$SR+ = SR- = \frac{I_{bias}}{C_L}. \tag{3}$$

Unfortunately, both the positive and the negative slew rates are not perfectly equal to each other: this inequality mainly depends on charge modulation across M_{b1}, asymmetries in the circuit topology, and parasitic capacitances in the circuit. Asymmetric slew rates generate DC shift because asymmetries cause even-order nonlinear distortions. Reference [26] reports that a reduction in the parasitic tail capacitance reduces the appearing DC shift: as mentioned previously, reducing C_{T1} reduces charge accumulation (*rule 3*) while simultaneously improving the linearity of the circuit (*rule 2*). In [30], a similar situation is presented where a fully differential folded cascode amplifier structure is connected to a cross-coupled and highly symmetrical class AB buffer, leading to a symmetrical slew rate.

In this same design, extra internal capacitors between the gate and the source of M_1 and M_2 have been added, which improves the EMI immunity at very high frequencies (*rule 1*). These extra capacitors act as a short circuit at very high frequencies, which forces the opamp to follow its input signal, reducing the EMI-induced offset.

D. Rule 4: mitigate the EMI induced DC shift by using compensation and cancellation

A practical example of the application of this guideline is reported in [29] and [30]. For the sake of clarity, the amplifier topology used in both references has been duplicated in Fig. 15. This fully-differential cross-coupled amplifier exhibits a gain of 35 dB. In [29], the overall amplifier is based on the cascade of two identical blocks, while in [30], the opamp topology is constituted of a fully-differential high swing folded cascode amplifier followed by the cross-coupled amplifier as the output stage in order to realize a high voltage gain. In both topologies, the symmetry of the architecture has been exploited to achieve a very large EMI immunity. This circuit is based on a double source cross-coupled differential pair (transistors M_{10} and M_{11}), connected to two current mirror active loads. The input voltages are applied to the gates of M_{9a} and M_{9b}, in order to bias the NMOS differential pair, and to the gates of M_{8a} and M_{8b} to bias the PMOS differential pair. Thus, any voltage mismatch or distortion, due to stray elements, non-linearities and noise, is removed owing to this cross-connection: mismatch is mitigated by the fact that the current in M_{11_a-b} must be the same the one in M_{10_b-a}. This current is then mirrored by the up-mirrors M_{12_a-b}-M_{14_a-b} and by the down-mirrors M_{13_a-b}-M_{15_a-b}. This results in an averaging between the voltage transients, which leads to a strong reduction of the distortion and, thus, to a strong reduction of the EMI susceptibility. Adopting this amplifier stage, the simulated and measured EMI susceptibility is reduced by more than one order of magnitude, as reported in [29] and [30].

It should be observed that the source cross-coupled amplifier is not suited for low voltage supplies owing to the multiple cascoded devices. A topology which uses this guideline, while being suited to low supply voltages, is reported in [35] and [36]: the schematic is depicted in Fig. 16. This topology is derived from the Miller configuration and thus it is suited for low voltage supply. The input stage is a classical differential pair biased by tail current source M_5. The drains of the input devices M_1 and M_2 are tied to the active loads M_3 and M_4 and cross-connected to the current mirrors M_6-M_9

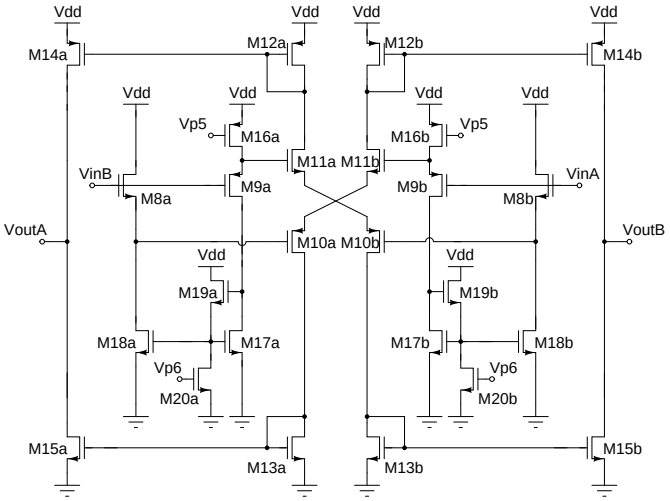

Fig. 15. Schematic of the cross-coupled amplifier used in [29] and [30].

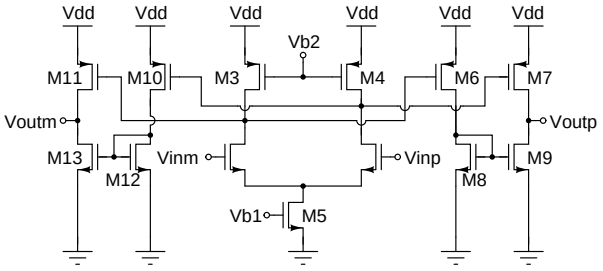

Fig. 16. Schematic of the opamp presented in [35] and [36].

and M_{10}-M_{13}. This scheme ensures symmetrical slew rates and, more generally, a symmetrical transient response of the amplifier. A test-chip has been fabricated in a 0.18 μm UMC CMOS process: the measurements shown in Fig. 17 confirm the validity of the architecture and they show the increased immunity compared to that of a low-voltage commercial amplifier, the LMV951.

VII. Conclusions

This paper describes the effect of EMI (electromagnetic interference) on analog integrated circuits. After discussing the measured EMI induced offset in commercial opamps, four design guidelines targeted at improving the susceptibility of circuits to EMI have been presented. These four guidelines were subsequently applied to EMI resisting differential pairs and opamp designs, illustrating the validity of the former rules, while confirming and situating the increased robustness of the latter circuits within a theoretical framework.

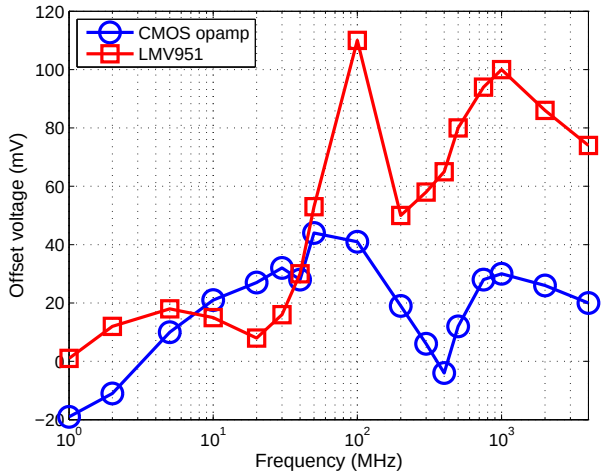

Fig. 17. Effect of $1V_{pp}$ EMI on the input pin in the case of V_{dd}=1V : a comparison between the opamp presented in [35] and [36] and the LMV951.

References

[1] M. Ramdani, E. Sicard, A. Boyer, S. Ben Dhia, J. J. Whalen, T. H. Hubing, M. Coenen and O. Wada, "The Electromagnetic Compatibility of Integrated Circuits-Past, Present and Future", *IEEE Transactions on Electromagnetic Compatibility*, vol. 51, no. 1, pp. 78-100, Feb. 2009.

[2] I. Chahine, M. Kadi, E. Gaboriaud, A. Louis, B. Mazari, "Characterization and Modeling of the Susceptibility of Integrated Circuits to Conducted Electromagnetic Disturbances Up to 1 GHz", *IEEE Transactions on Electromagnetic Compatibility*, vol. 50, no. 2, pp. 285 - 293, 2008.

[3] V. Ceperic and A. Baric, "Modelling of Electromagnetic Immunity of Integrated Circuits by Artificial Neural Networks", International Zurich Symposium on Electromagnetic Compatibility, 2009.

[4] X.-K. Gao, E.-K. Chua, E.-P. Li , "Behavioral modeling for electromagnetic immunity analysis for electronic systems", IEEE Asia-Pacific International Symposium on Electromagnetic Compatibility, 2010.

[5] I. Gil and R. Fernandez-Garcia, "Characterization and modelling of EMI susceptibility in integrated circuits at high frequency", IEEE International Symposium on Electromagnetic Compatibility, 2012.

[6] S. Hairoud, T. Dubois, A. Tetelin, G. Duchamp, "Conducted immunity of three Op-Amps using the DPI measurement technique and VHDL-AMS modeling", International Symposium on Electromagnetic Compatibility (EMC COMPO), 2013.

[7] F. Fiori, P. Crovetti, "Prediction of high-power EMI effects in CMOS operational amplifiers", *IEEE Transactions on Electromagnetic Compatibility*, vol. 48, no. 1, pp. 153 - 160, 2006.

[8] S. Ben Dhia, A. Boyer, B. Vrignon, M. Deobarro, T. V. Dinh, "On-Chip Noise Sensor for Integrated Circuit Susceptibility Investigations", *IEEE Transactions on Instrumentation and Measurement*, vol. 61, no. 3, pp. 696 - 707, 2012.

[9] R. Perdriau, O. Maurice, S. Dubois, M. Ramdani, E. Sicard, "Exploration of radiated electromagnetic immunity of integrated circuits up to 40 GHz", *IET Electronics Letters* vol. 47, no. 10, 2012.

[10] J. Loeckx, T. Deman, T. McConaghy, G. Gielen, "EMI-immune analogue circuit generated through genetic evolution", *IET Electronics Letters* vol. 45, no. 4, 2009.

[11] J.-M. Redouté and M. Steyaert, *EMC of Analog Integrated Circuits,* Springer, 2010.

[12] C. R. Paul, *Introduction to Electromagnetic Compatibility*, John Wiley and Sons, 1992.

[13] A. S. Poulton, "Effect of conducted EMI on the DC performances of operational amplifiers", *Electronics Letters,* Vol. 30, pp.282-284, 1994.

[14] G. Masetti, S. Graffi, D. Golzio and Zs. M. Kovács-Vajna, "Failures Induced on Analog Integrated Circuits from Conveyed Electromagnetic Interferences: a Review", *Microelectronics and Reliability,* vol. 36, no. 7/8, pp. 995-972,1996.

[15] G. Setti and N. Speciale, "Design of a Low EMI Susceptibility CMOS Operational Amplifier", *Microelectronics and Reliability,* vol. 38, pp. 1143, 1998.

[16] S. Ben Dhia, M. Ramdani and E. Sicard, *Electromagnetic Compatibility of Integrated Circuits,* Springer, 2006.

[17] T. Dubois, J.-J. Laurin, J.-J., J. Raoult, S. Jarrix, "Effect of Low and High Power Continuous Wave Electromagnetic Interference on a Microwave Oscillator System: From VCO to PLL to QPSK Receiver" *IEEE Transactions on Electromagnetic Compatibility*, vol. 56, no. 2, pp. 286 - 293, 2014.

[18] J.-M. Redouté and M. Steyaert, "EMI Resistant CMOS Differential Input Stages", *IEEE Transactions on Circuits and Systems I*, vol. 57, no. 2, pp. 323-331, 2010.

[19] F. Fiori, "Design of an Operational Amplifier Input Stage Immune to EMI," *IEEE Transactions on Electromagnetic Compatibility*, vol. 49, no. 4, Nov. 2007.

[20] F. Michel and M. Steyaert, "Comparison of high impedance input topologies with low EMI susceptibility," *Analog Integrated Circuits and Signal Processing*, vol. 65, no. 2, pp. 299-309, Apr. 2010.

[21] F. Fiori and P. S. Crovetti, "Complementary differential pair with high immunity to RFI," *Electronics Letters*, vol. 38, no. 25, pp. 1663-1664, Dec. 2002.

[22] P. S. Crovetti, "Operational Amplifier Immune to EMI with no baseband performance degradation," *Electronics Letters*, vol. 46, no. 3, Feb. 2010.

[23] Zs. M. Kovács-Vajna, E. Sardini and N. Speciale, "Chaotic Behaviour of 741 opamps Subjected to EMI Conveyed to Power Supply Rails," *Proc. ISCAS00 Geneva*, Vol.1, pp. 727-730, 2000.

[24] N. Lacrampe, A. Alaeldine, F. Caignet, R. Perdriau, M. Bafleur, N. Nolhier, M. Ramdani, "Investigation on ESD Transient Immunity of Integrated Circuits", IEEE International Symposium on Electromagnetic Compatibility, 2007.

[25] B. Deutschmann, F. Magrini, Y. Cao, "Robustness of ESD protection structures against automotive transient disturbances", IEEE Asia-Pacific International Symposium on Electromagnetic Compatibility, 2010.

[26] G. Masetti, G. Setti and N. Speciale, "On the key Role of parasitic Capacitances in the Determination of Susceptibility to EMI of Integrated Operational Amplifiers", EMC99 Zurich, 1999.

[27] IEC 62132, *Integrated Circuits, Measurements of Electromagnetic Immunity up to 1 GHz*, available online: www.iec.ch.

[28] P. Schroter, F. Klotz, "On chip filtering versus layout techniques to reduce RF coupled disturbances", IEEE International Symposium on Electromagnetic Compatibility, 2010.

[29] A. Richelli, L. Colalongo and Zs. M. Kovács-Vajna, "Increasing the Immunity to Electromagnetic Interferences of CMOS Operational Amplifiers," *IEEE Transactions on Reliability*, vol. 52, no. 3, pp. 349-353, 2003.

[30] A. Richelli, L. Colalongo, M. Quarantelli and Zs. M. Kovács-Vajna, "Robust design of low EMI susceptibility CMOS opamp," *IEEE Transactions on Electromagnetic Compatibility*, vol. 46, no. 2, pp. 291-298, 2004.

[31] A. Richelli, "CMOS opamp Resisting to Large Electromagnetic Interferences," *IEEE Transactions on Electromagnetic Compatibility*, vol. 52, no. 4, pp. 1062-1065, 2010.

[32] A. Richelli, "Increasing EMI Immunity in novel low-voltage CMOS opamps," *IEEE Transactions on Electromagnetic Compatibility*, vol. 54, no. 4, pp. 947-950, 2012.

[33] A. Boni, "Op-Amps and Startup Circuits for CMOS Bandgap References With Near 1-V Supply," *IEEE Journal of Solid State Circuits*, vol. 37, no. 10, pp. 1339-1343, 2002.

[34] S. Sbaraini, A. Richelli and Zs. M. Kovács-Vajna, "EMI susceptibility in bulk-driven Miller opamp," *Electronics Letters*, vol. 46, no. 16, pp. 1111-1113, 2010.

[35] A. Richelli, "Design considerations for an ultra-low voltage amplifier with high EMI immunity", ICECS, pp. 558-561, Malta, 2008.

[36] A. Richelli, "Measurements of EMI susceptibility in ultra-low-voltage opamps", International Symposium on Electromagnetic Compatibility (EMC COMPO), pp. 13-17, Croatia, 2011.

Jean-Michel Redouté received the degree of M.S. in electronics at the University College of Antwerp, in 1998, and the degree of M.Eng. in electrical engineering at the University of Brussels (VUB), in 2001. In August 2001, he started working at Alcatel Bell in Antwerp, Belgium, where he was involved in the design of analog microelectronic circuits for telecommunications systems. Between January 2005 and August 2009, he worked at the ESAT-MICAS laboratories of the University of Leuven as a Ph. D. research assistant. In September 2009, he joined the Berkeley Wireless Research Center at the University of California, at Berkeley as a postdoctoral scholar. In September 2010, he started working at Monash University as a Senior Lecturer. His research interests include robust mixed-signal integrated circuit design with a high immunity to electromagnetic interference, electromagnetic compatibility and exposure, biomedical circuit design and radio frequency integrated circuit design.

Anna Richelli was born in Brescia, Italy, in 1974. She received the Laurea degree in electronic engineering in 2000 from the University of Brescia, Brescia, Italy. She received the PhD. degree at the same University in 2004. She is currently assistant professor at the Department of Information Engineering, University of Brescia. Her main research interests include design of ultra-low voltage analog circuits, DC/DC converters and integrated analog circuits with high immunity to electromagnetic interferences.